Attachment G

RECEIVED
MAY 23 2006
CITY OF CALABASAS
PLANNING DEPT.

26705 MALIBU HILLS ROAD

OAK TREE REPORT

RICHARD W. CAMPBELL
OAK TREE PRESERVATION SPECIALIST

Richard W. Campbell
ASLA BSLA
Landscape Architect
Calif. #1099 - Nev. #14
(805) 375-1010
P. O. Box 6192
Thousand Oaks, Calif. 91359

OAK TREE REPORT
26705 MALIBU HILLS ROAD
May 15, 2006

Isaac Zaharoni
c/o Steve Kaplan
1219 Morningside Drive Suite #110
Manhattan Beach, Calif. 90266

Attn: Steve

SUBJECT SITE:

AN OAK TREE REPORT FOR
26705 MALIBU HILLS ROAD
SENIORS CONDOMINIUM FACILITY
THE CITY OF CALABASAS, CALIF.

GENERAL STATEMENT

On May 12, 2006, an Oak Tree "Survey" was conducted at the Subject Site at 26705 Malibu Hills Road. A ground level field inventory and external details (caliper size, general health and physical & aesthetic character) were recorded. Three (3) "planted" Quercus agrifolia (Coast Live Oak) Trees were evaluated for their present condition based on "owner's" concern for the general health and impacts relative to the proposed new grading, access and construction activities for a seniors condominium facility. The results of the "Survey" are shown on the attached Tree Evaluation Summary Form(s), and as outlined herein. No "Heritage Oak" Trees were observed at the site. An "Heritage Oak' is one which trunk(s) measure twenty-four (24") inches in diameter, or greater, at fifty-four (54") inches above grade. Any Oak tree with multiple trunks growing from one root system shall be deemed an "Heritage Oak" if the diameter is at least eighteen inches (18") as measured immediately below the main crotch. "Heritage Oaks" require a fifty (50') foot "Protected Zone" around their trunks. Proposed impacts to two of these "planted" Oak Trees adjacent to this construction are expected to be moderate to nil. As much as possible, all grading and construction elements are to be designed to avoid impacts to these existing Oak Trees. Field monitoring will direct workers to avoid and preserve the branching and root areas of the Oak Trees to be preserved in place. One of the Oak Trees is in direct conflict with the proposed facility grading and driveway access; and, it is proposed to be removed.

The new grading, driveway access and seniors condominium facility construction is planned to encroach into the "Protected Zones" of two (2) Oak Trees. Tree KOT-1 is expected to be moderately impacted by a proposed retaining wall, is to remain protected in place and some pruning is proposed for pedestrian clearance. Oak tree KOT-2 is in the grading and driveway access of the proposed facility is proposed to be removal and replacement. Oak Tree KOT-3 is not expected to be impacted.

The American Society of Landscape Architects founded 1899

4. **Hand dig** vertical trench or fence post(s) at the final location to final grade and "bridge-over", move footing/post or cleanly cut and seal with tree/root seal, as approved by the oak tree preservation consultant, any and all roots encountered . (This procedure shall protect the root system from unnecessary damage by excavation equipment).

5. All footings for wall construction (as applicable) shall be designed to provide minimal impact to the tree and backfilled with topsoil.

6. Unless waived, a minimum five (5') foot high temporary chain link fence shall be constructed at the limit of approved work to protect the adjacent trees from further unauthorized damage and remain in place until completion of construction. Should any work be required within the limit of work, and the temporary fence must be opened, the oak tree preservation consultant **must** direct **all work** at any time the fence is open.

7. No further work within the aerial/root ("protected") zone shall be done beyond that which was approved, without obtaining written approval prior to proceeding.

8. The area within the chain link fence shall not be used at any time for material or equipment storage or parking.

9. No chemicals or herbicides shall be applied to the soil surface within 100' of an oak tree's aerial/root (protected) zone.

10. Copies of the following shall be maintained on the site during any work to or around the Oaks, as applicable:

    OAK TREE REPORT
    OAK TREE PERMIT
    ENGINEERING PLANS
    INSPECTION TICKET
    OAK TREE PRESERVATION AND GUIDELINES
    OAK TREE ORDINANCE #2001-166
    APPROVED SITE PLAN

During any construction and/or treatment, tree work and impacts must be closely monitored to further mitigate shock symptoms should they occur. If needed, water must be provided to irrigate the tree(s) and also to wash the dust from foliage.

PROTECTION

Unless waived by the City of Calabasas to preserve Oak trees in a construction area, a minimum 5' height chain link **fence** must be installed at the limit of work, prior to any clearing, grubbing, demolition, construction and/or treatment, in order to protect the sensitive "Z.O.N.E.", during all work operations. The Oak Tree Preservation Consultant of record must "function" as the **fence** for any work necessary within the Z.O.N.E. fenced area, while directing or observing work in and near any oak tree.

Z.O.N.E.= "Zone of Nutraire Endemic" (the area of natural or amended planting medium which may extend to or beyond the dripline of a native tree). An oak care and maintenance

CLEAN FILL FROM BASE OF TRUNKS OF OAK TREES TO REMAIN (WITHOUT DAMAGING FEEDER ROOTS OR SEEDLINGS) AS DIRECTED, IS ALSO RECOMMENDED.

PROTECT "DUFF" AREAS TO ALLOW OAK SEEDLINGS TO ESTABLISH.

FINAL DETERMINATION OF TREATMENT WILL BE AS DIRECTED IN THE FIELD BY THE OAK TREE PRESERVATION SPECIALIST.

IN ADDITION TO THESE PROCEDURES SEE TREE EVALUATION SUMMARY FORM ATTACHED. PERIODIC (AT LEAST QUARTERLY) MONITORING FOR DECLINING BRANCHING SYSTEMS, IS ALSO RECOMMENDED.

2) SPECIFIC TREATMENT:

TREES KOT-1 AND KOT-3 NO TREATMENT REQUIRED

3) IMPACTS:

TREE KOT-1	**RETAINING WALL CONSTRUCTION**
TREE KOT-2	**REMOVAL DUE TO GRADING AND DRIVEWAY ACCESS**
TREE KOT-3	**NONE EXPECTED**

4) MITIGATION:

In accordance with the City of Calabasas Standards, we are submitting the PRC value for estimated impact to Trees KOT-1 THRU KOT-3. See the Condition Value forms hereinafter attached.

The requirement for replacement value for Trees under 7" in diameter is to value each Tree by its container size equivalent.

KOT-1 **This 6" Tree is equivalent to a 72" box nursery grown specimen:**

$3,500.00 (Basic value)

The condition value of this Tree is estimated to be 85%

$3,500.00 x .85 = $2,975.00 (Condition value)

The impact(s) to this Tree are estimated to be ±20.0%

$2,975.00 x 0.20 = $595.00 (Impact value)

TOTAL PRC IMPACT VALUE = $595.00

B+ KOJ- 1

GUIDE FOR JUDGING THE CONDITION OF LANDSCAPE TREES

FACTOR	VARIATION IN CONDITION FACTOR	POINTS	POINTS AWARDED
CROWN DEVELOPMENT	Characteristic of species - well balanced	(5)	
	Lacking natural or desired symmetry	(3)	5
	Lacking full crown	(1)	
TRUNK CONDITION	Sound and solid	(5)	
	Section of bark missing:		
	less than 1/4 of circumference	(4)	
	1/4 to 1/2 missing	(3)	
	1/2 or more missing	(1)	3
	Extensive decay or hollow	(0)	
MAJOR BRANCH STRUCTURE	No defects	(5)	
	Die back limited	(4)	
	Few structurally important dead or broken branches	(3)	
	Several structurally important dead or broken branches	(1)	4
TWIG GROWTH RATE	Typical for species and age - usually 4-6 inches	(5)	
	Less than 1/2 normal growth rate	(3)	
	Growth rate greatly reduced - yearly decline	(1)	5
FOLIAGE	Normal size and color for species	(5)	
	Minor deficiency/pollution symptoms	(3)	4
	Major deficiency/pollution symptoms	(1)	
INSECTS & DISEASES	No insects or diseases apparent	(5)	
	Few controllable insects or diseases present	(3)	4
	Severe infestation	(1)	
ROOTS	No root problems apparent	(5)	
	Minor root problems	(3)	4
	Severe root problems	(1)	

Total Points	Condition Class	Formula % for Condition 33
30 - 35	Excellent	90 - 100%
24 - 29	Good	70 - 89
17 - 23	Fair	50 - 69
11 - 16	Poor	25 - 49
6 - 10	Very Poor	0 - 24

85%

B+

KOT-3

GUIDE FOR JUDGING THE CONDITION OF LANDSCAPE TREES

FACTOR	VARIATION IN CONDITION FACTOR	POINTS	POINTS AWARDED
CROWN DEVELOPMENT	Characteristic of species - well balanced	(5)	
	Lacking natural or desired symmetry	(3)	5
	Lacking full crown	(1)	
TRUNK CONDITION	Sound and solid	(5)	
	Section of bark missing:		
	less than 1/4 of circumference	(4)	
	1/4 to 1/2 missing	(3)	
	1/2 or more missing	(1)	3
	Extensive decay or hollow	(0)	
MAJOR BRANCH STRUCTURE	No defects	(5)	
	Die back limited	(4)	
	Few structurally important dead or broken branches	(3)	
	Several structurally important dead or broken branches	(1)	4
TWIG GROWTH RATE	Typical for species and age - usually 4-6 inches	(5)	
	Less than 1/2 normal growth rate	(3)	
	Growth rate greatly reduced - yearly decline	(1)	5
FOLIAGE	Normal size and color for species	(5)	
	Minor deficiency/pollution symptoms	(3)	4
	Major deficiency/pollution symptoms	(1)	
INSECTS & DISEASES	No insects or diseases apparent	(5)	
	Few controllable insects or diseases present	(3)	4
	Severe infestation	(1)	
ROOTS	No root problems apparent	(5)	
	Minor root problems	(3)	4
	Severe root problems	(1)	

Total Points	Condition Class	Formula % for Condition 33
30 - 35	Excellent	90 - 100%
24 - 29	Good	70 - 89
17 - 23	Fair	50 - 69
11 - 16	Poor	25 - 49
6 - 10	Very Poor	0 - 24

85%

tree evaluation form

26705 MALIBU HILLS ROAD

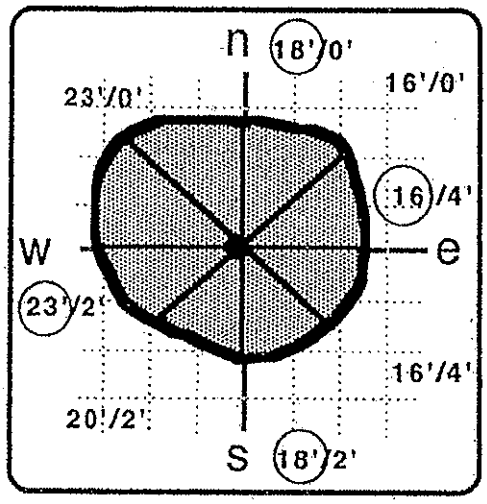

SPECIES: Quercus agrifoia

APPEARANCE (A-F): B DATE: 5-12-06

HEALTH (A-F): B+ INSPECTOR: DC

NO. OF TRUNKS: 1 HEIGHT±: 32'

DIA. OF TRUNKS: 91/2"

TREE #

KOT-2

VIGOR:

- ○ CHLOROSIS
- ○ EPICORMIC GROWTH
- ○ DIEBACK
- ○ DEADWOOD
- ○ THINNING OF CROWN
- ● GOOD SHOOT GROWTH

STRUCTURE:

- ○ BROKEN BRANCHES
- ○ PRIOR POOR PRUNING
- ○ MECHANICAL INJURY
- ○ WIRE/NAILS/SPIKES
- ○ TORN BRANCH SCARS
- ○ SHARP BRANCH ANGLE
- ● LOW BRANCHING
- ○ WATER TRAP
- ○ CAVITY-TRUNK
- ○ HOLLOW BRANCH(S)
- ○ LOPSIDED CANOPY
- ○ EXCESS HORIZ. GROWTH
- ○ DECAY / ROT OBSERVED
- ○ FIRE DAMAGE
- ○ ROOTS EXPOSED
- ○ HARZARDOUS CONDITION
- ○ STRUCTURE CONFLICT
- ○ STRESS CRACKS NOTE.
- ○ CROSSING BRANCHES

PESTS:

- ○ BORERS / TERMITES
- ● GIRDLERS
- ○ ANTS
- ○ WOODPECKERS
- ○ GALLS
- ○ WITCHES BROOM
- ○ PIT-SCALE
- ○ OAK MOTH
- ○ BEES
- ○ PLANT PARASITES

DISEASE:

- ○ MARGINAL LEAF SCORCH
- ○ EXFOLIATION
- ○ LESIONS
- ○ EXUDATIONS
- ○ EHRHORN'S SCALE

ENVIRONMENT:

- ○ COMPACT SOIL
- ● PLANTED ON SLOPE
- ● BRANCHES ON GROUND
- ● IRRIGATED GR. COVER

GRAPHIC.

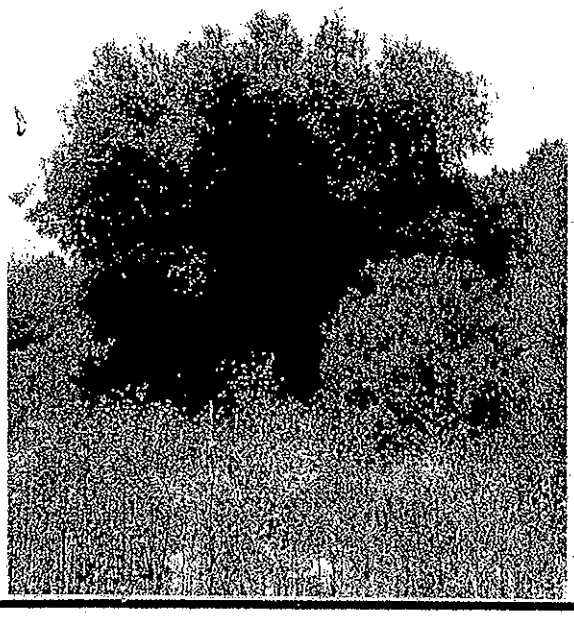

REMARKS / RECOMMENDATIONS:

REMOVE THIS TREE AND REPLACE WITH (4) 24" BOX AND (1) 15 GALLON COAST LIVE OAK TREES, ON THE PROPERTY.

RICHARD W. CAMPBELL, ASLA, BSLA
P. O. BOX 6192
THOUSAND OAKS, CALIFORNIA 91359

TENTATIVE TR

CONCEPTUAL
FOR CO
IN THE CITY OF CALABASAS, CO

BEING A SUBDIVISION O
MAP RECORDED IN BOOK
RECO

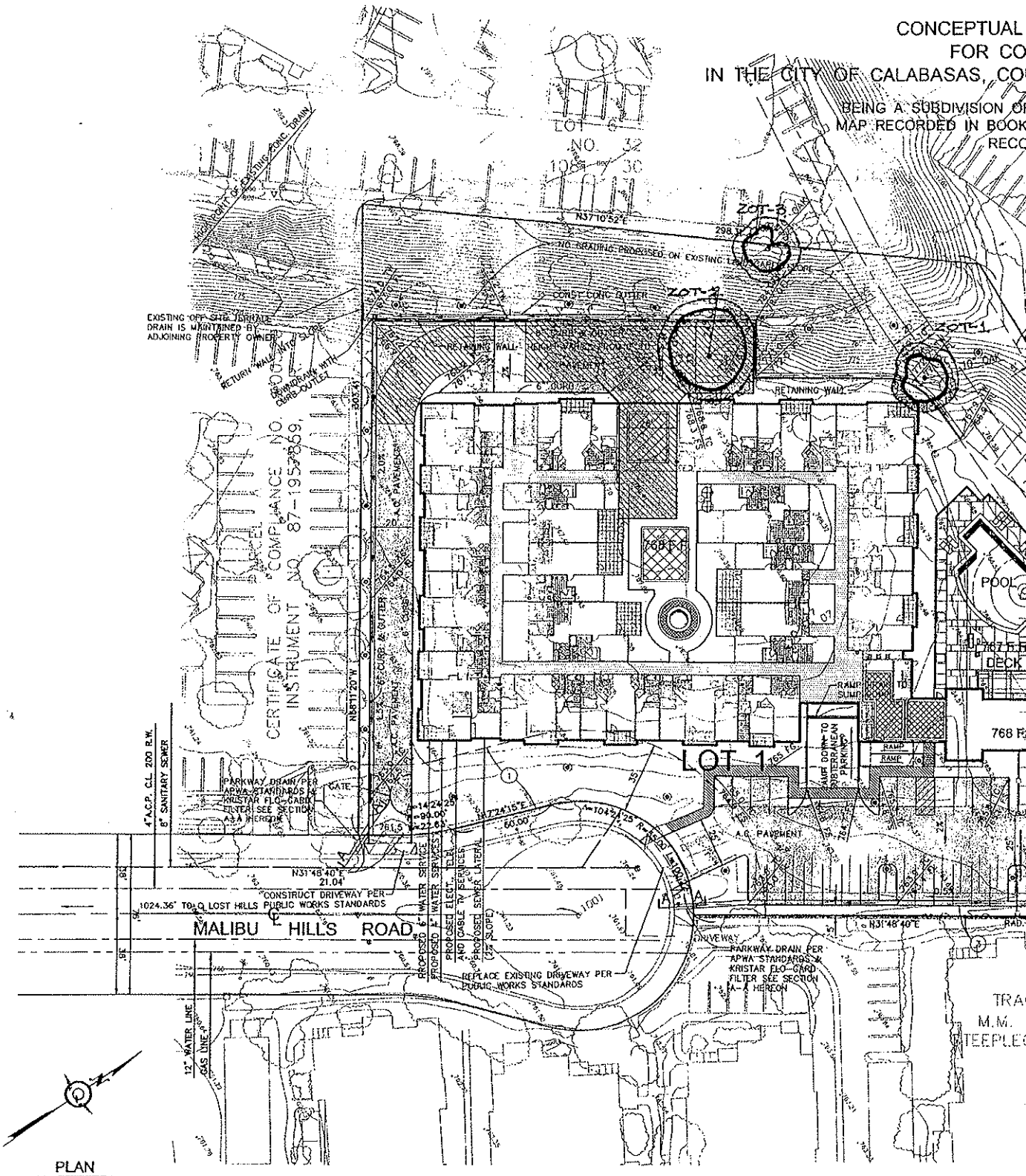

DIGALERT
DIAL TOLL FREE
1-800-227-2600
AT LEAST TWO DAYS BEFORE YOU DIG
UNDERGROUND SERVICE ALERT OF SOUTHERN CALIFORNIA

ANY UNDERGROUND UTILITIES OR STRUCTURES SHOWN ON THESE PLANS WERE PLOTTED FROM CITY RECORDS. NO ADDITIONAL UTILITY OR SUBSTRUCTURE RESEARCH HAS BEEN PERFORMED. THE CONTRACTOR SHALL DETERMINE THE EXISTENCE AND THE TRUE HORIZONTAL AND VERTICAL LOCATION AND SIZE OF ANY UNDERGROUND UTILITIES OR STRUCTURES AND SHALL BE RESPONSIBLE FOR PROTECTION, ADJUSTMENT, OR DAMAGE TO ANY PUBLIC OR PRIVATE UTILITIES SHOWN OR NOT SHOWN HEREON. THE CONTRACTOR SHALL ALSO BE RESPONSIBLE FOR NOTIFYING U.S.A./DIG ALERT AT 1-800-227-2600 FOR UNDERGROUND UTILITY MARKING AT LEAST 48 HOURS PRIOR TO COMMENCING ANY CONSTRUCTION. CONSTRUCTION SHALL NOT COMMENCE PRIOR TO SAID UNDERGROUND UTILITY MARKING.

REGISTERED PROFESSIONAL ENGINEER
ROBERT T. QUINN
No. C24989
(EXPIRES 12/31/2007)
CIVIL
STATE OF CALIFORNIA

PLANS PREPARED BY:
R. T. QUINN & AS
CIVIL ENGINEERS LA
18
Torrance
(310) 320-4125 F
E-Mail Address:
ROBERT T. QUINN
DATE: 5-8-06
JOB